CYW920829B0M2P4XXI100

CONTENTS

PAGE	DESCRIPTION
01	Title Page
02	Block Diagram
03	Adaptor
04	Revision History

Drawing Numbers

PCBA	121-20202-01	CYW920829B0M2P4TAI100
	121-20203-01	CYW920829B0M2P4EPI100
PCB	600-20198-01	
FAB DRW	610-20198-01	
ASSY DRW	620-20198-01	
SCH DRW	630-20198-01	

Legal Disclaimer :
The information given in this document shall in no event be regarded as a guarantee of conditions or characteristics. With respect to any examples or hints given herein, any typical values stated herein and/or any information regarding the application of the device, Infineon Technologies hereby disclaims any and all warranties and liabilities of any kind, including without limitation, warranties of non-infringement of intellectual property rights of any third party.

SCH Title : CYW920829B0M2P4XXI100

Page Title: Title Page

Size	Document Number	Drawn By	Approved By	Rev
A4	630-20198-01	XJZH	YDLI	1.0

Date: Tuesday, January 23, 2024 Sheet 1 of 4

Block Diagram

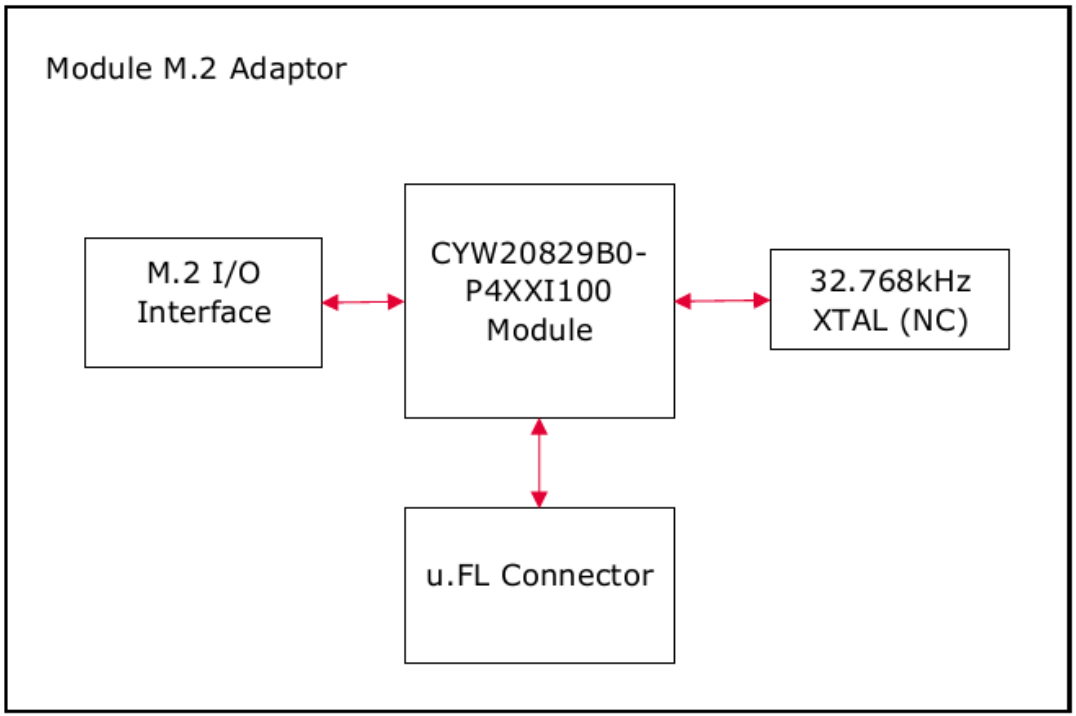

Legal Disclaimer :
The information given in this document shall in no event be regarded as a guarantee of conditions or characteristics. With respect to any examples or hints given herein, any typical values stated herein and/or any information regarding the application of the device, Infineon Technologies hereby disclaims any and all warranties and liabilities of any kind, including without limitation, warranties of non-infringement of intellectual property rights of any third party.

SCH Title : CYW920829B0M2P4XXI100				
Page Title: Block Diagram				
Size	Document Number	Drawn By	Approved By	Rev
A4	630-20198-01	XJZH	YDLI	1.0
Date: Wednesday, January 24, 2024		Sheet 2 of 4		

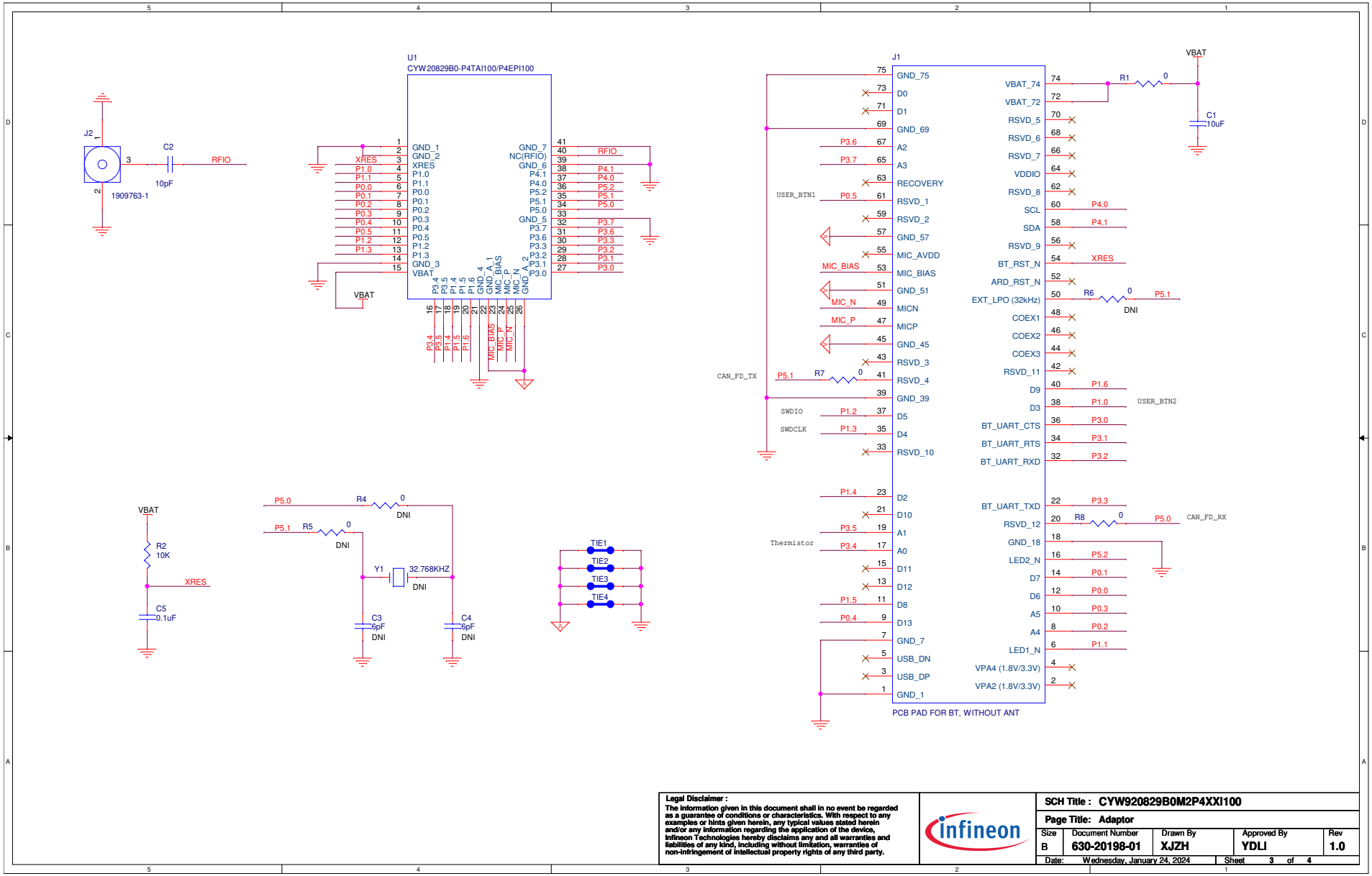

Legal Disclaimer :
The information given in this document shall in no event be regarded as a guarantee of conditions or characteristics. With respect to any examples or hints given herein, any typical values stated herein and/or any information regarding the application of the device, Infineon Technologies hereby disclaims any and all warranties and liabilities of any kind, including without limitation, warranties of non-infringement of intellectual property rights of any third party.

SCH Title : CYW920829B0M2P4XXI100				
Page Title: Adaptor				
Size	Document Number	Drawn By	Approved By	Rev
B	630-20198-01	XJZH	YDLI	1.0
Date: Wednesday, January 24, 2024		Sheet 3 of 4		

REVISION HISTORY

REV	DESCRIPTION OF CHANGE	DATE
1.0	Initial Release	8/18/2023

Legal Disclaimer :
The information given in this document shall in no event be regarded as a guarantee of conditions or characteristics. With respect to any examples or hints given herein, any typical values stated herein and/or any information regarding the application of the device, Infineon Technologies hereby disclaims any and all warranties and liabilities of any kind, including without limitation, warranties of non-infringement of intellectual property rights of any third party.

SCH Title : CYW920829B0M2P4XXI100

Page Title: Revision History

Size	Document Number	Drawn By	Approved By	Rev
A4	630-20198-01	XJZH	YDLI	1.0

Date: Tuesday, January 23, 2024